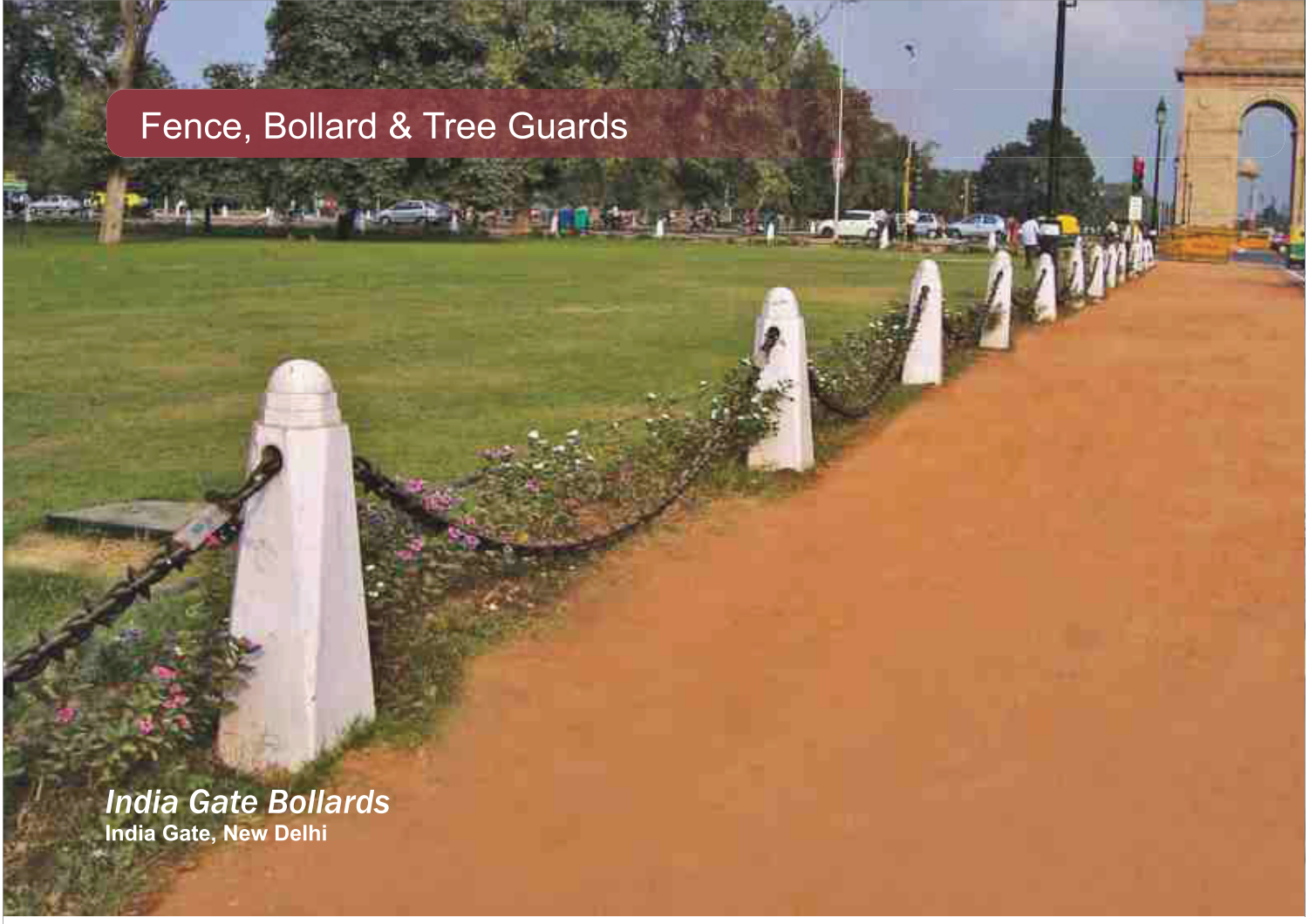

India Gate Bollards
India Gate, New Delhi

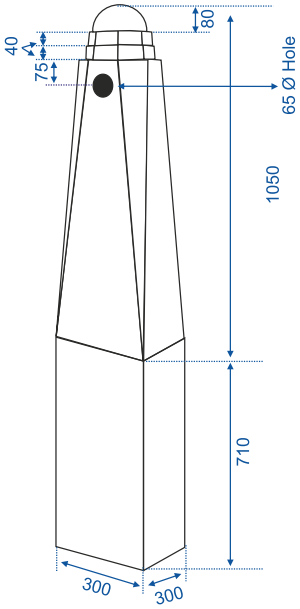

Specification

- Overall Dimensions: Total Height-1760 mm, Base size of 300 X 300 mm & tapering to an Octagonal shape at the top of 90 mm side
- The bollard is reinforced with 4 Nos 16 mm dia Tor steel along the four corners of the bollards & tied with stirrups of 8 mm Tor steel at 150 mm c/c
- The bollard is manufactured with cement concrete of M-30 grade by vibro compaction method using FRP/steel moulds, so as to achieve shuttering finish
- Incorporates a hole of 65 mm dia with a GI pipe sleeve at the top to hang a MS chain

Mini India Gate Bollards

R. K. Puram, New Delhi

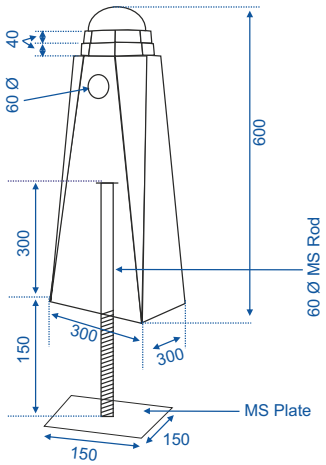

Specification

- Overall Dimensions: Total Height - 600 mm, Base size of 300 X 300 mm & tapering to an Octagonal shape at the top of 90 mm side
- The bollard is reinforced with 4 Nos 16 mm dia Tor steel along the four corners of the bollards & tied with stirrups of 8 mm Tor steel at 150 mm c/c
- The bollard is manufactured with cement concrete of M-30 grade by vibro compaction method using FRP/steel moulds, so as to achieve shuttering finish
- Incorporates a hole of 65 mm dia with a GI pipe sleeve at the top to hang a MS chain

Cylindrical Bollard

Our Bollards in USA

Type II

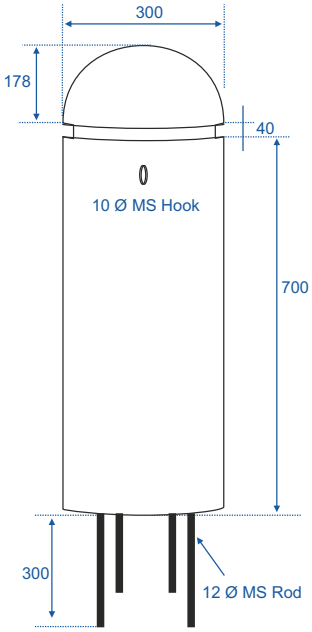

Specification

- Overall Dimensions: 918 mm Height X 300 mm Dia.
- Suitable reinforced to promote long life and to prevent damage during handling, transportation, & erection
- The bollard is provided with four Nos 12 mm dia tor steel bars for anchoring to the ground
- The bollard is manufactured with cement concrete of M-30 grade by vibro compaction method using FRP/steel moulds, so as to achieve shuttering finish

Cylindrical Bollard

Indraprastha Park in Sarial Kalekhan, New Delhi

Type I

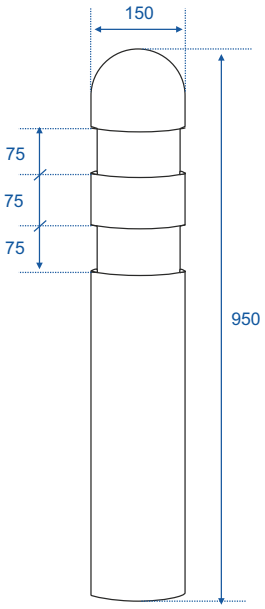

Specification

- Overall Dimensions: 950 mm Height X 150 mm dia,
- The bollard is reinforced with 4 Nos 8 mm dia 950 mm long tor steel bars, 4 Nos 12 mm dia 450 mm long tor steel bars, & 4 Nos 4 mm dia stirrups at 150mm c/c
- The bollard is manufactured with cement concrete of M-30 grade by vibro compaction method using FRP/steel moulds, so as to achieve shuttering finish

Fence, Bollard & Tree Guards

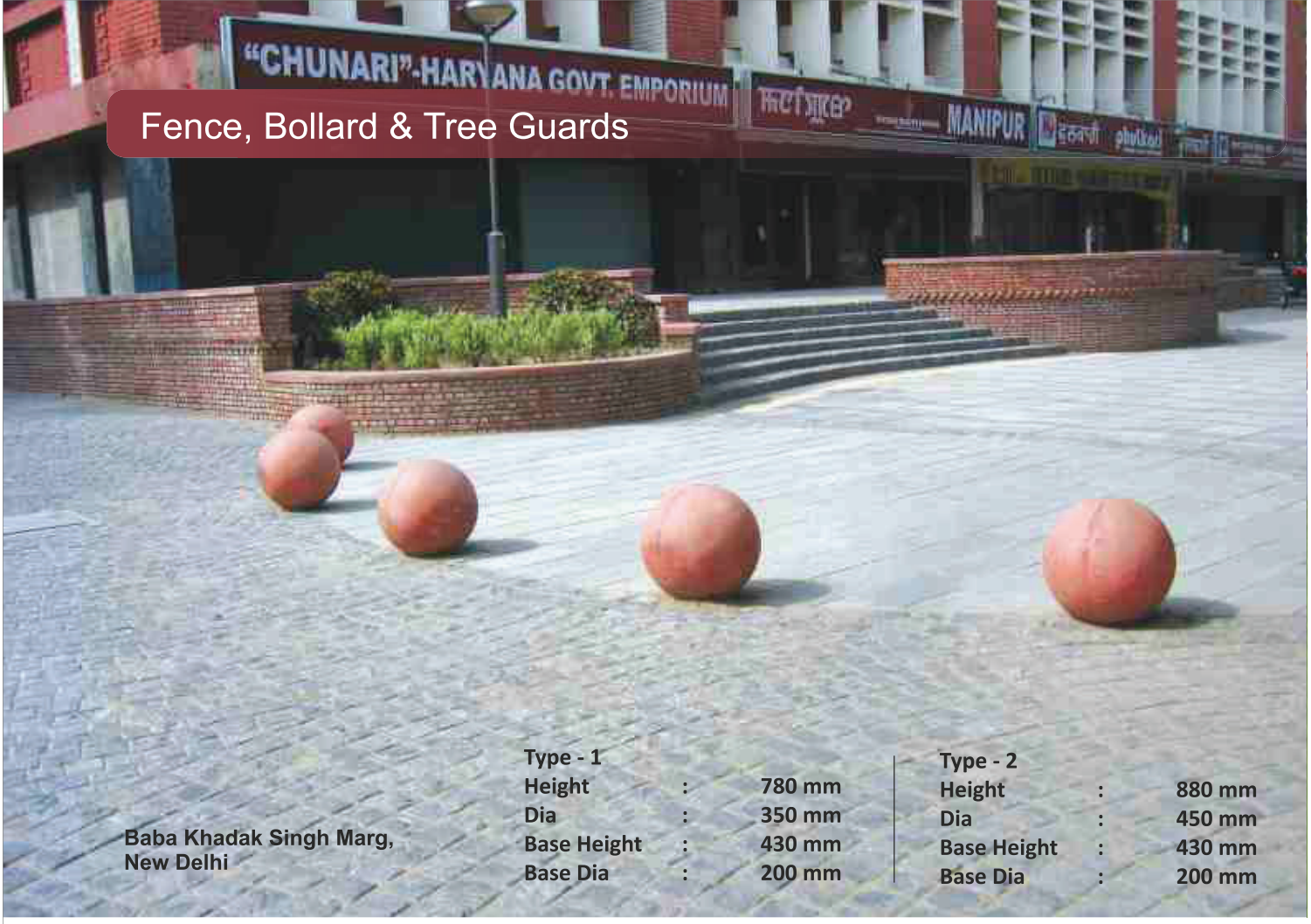

Baba Khadak Singh Marg,
New Delhi

Type - 1			Type - 2		
Height	:	780 mm	Height	:	880 mm
Dia	:	350 mm	Dia	:	450 mm
Base Height	:	430 mm	Base Height	:	430 mm
Base Dia	:	200 mm	Base Dia	:	200 mm

Exposed Aggregate Spherical Bollard

Type I Type II

Plain Spherical Bollard

Type I Type II

Specification

- Manufactured by using M-30 grade of concrete by vibro compaction process
- The outside surface of the spherical portion of the bollard has an exposed aggregate surface of approved marble chips combination

- Manufactured by using M-30 grade of concrete by vibro compaction process